Meet

DINO 185XTC II

DINO® SPIDER / CRAWLER

Standard features in DINO 185XTC II:

- Compact and narrow; width 1.4 m / 1.18 m
- Extremely stable to drive – long tracks; low ground pressure – low center of gravity
- Strong diesel engine, excellent gradeability 43 %
- Levelling to the max. inclination 16°
- Automatic levelling
- Hydraulic basket rotation 180°
- Easy-entry basket
- Continuous rotation of the boom
- AC sockets in the basket

Options available for DINO 185XTC II:

- User-friendly radio control
- Electric motor 110/230VAC
- Non-marking tracks
- DINO SafeGuard secondary guarding
- Special colour
- Converter 110V
- Narrow basket 0.70 x 0.80 m
- LED working lights

Technical data	Metric	Imperial
Max. working height	18.50 m	60 ft 8 in
Max. platform height	16.50 m	54 ft 2 in
Max. outreach	11.20 m	36 ft 9 in
Support width	3.54 / 3.95 m	11 ft 7 in / 12 ft 12 in
Lifting capacity	215 kg	475 lb
Basket size	0.7 x 1.3 m	2 ft 4 in x 4 ft 3 in
Boom rotation	cont.	cont.
Basket rotation	180°	180°
Boom control	proport.	proport.
Transport length	5.93 m	19 ft 6 in
Transport width	1.40 / 1.18 m	4 ft 7 in / 3 ft 10 in
Transport height	1.98 m	6 ft 7 in
Weight	2860 kg	6305 lb
AC socket in the basket x 2	std	std
Diesel engine Kubota 17.3 kW	std	std
Length of tracks	1.93 m	6 ft 4 in
Gradeability	43 %	43 %
Max. levelling inclination	16°	16°
Drive speed	1.4 / 2.4 km / h	0.9 / 1.5 mph
Automatic levelling	std	std
Radio control	option	option
Electric motor 110/230VAC	option	option

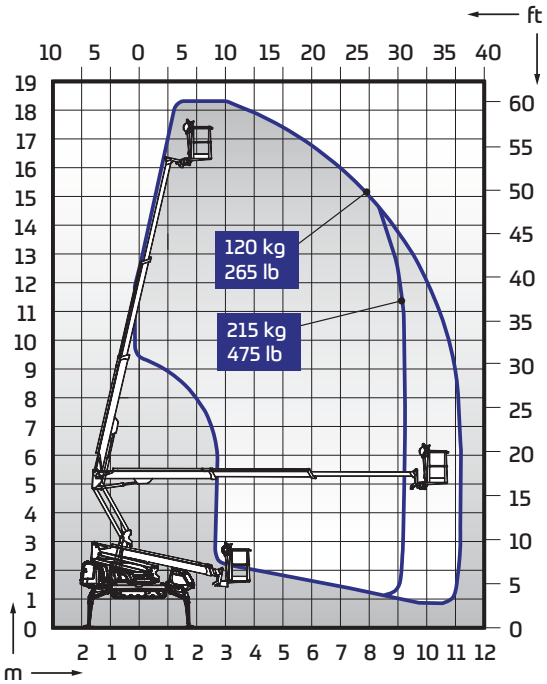

DINOlift

UP TO THE JOB

DINOlift Oy | Raikkolantie 145 • FI-32210 LOIMAA, FINLAND

Tel: +358 (0)20 1772 400 • E-mail: info@dinolift.com

www.dinolift.com

Technical specifications are subject to change without prior notice.

©Dinolift Oy | 4.12.2019